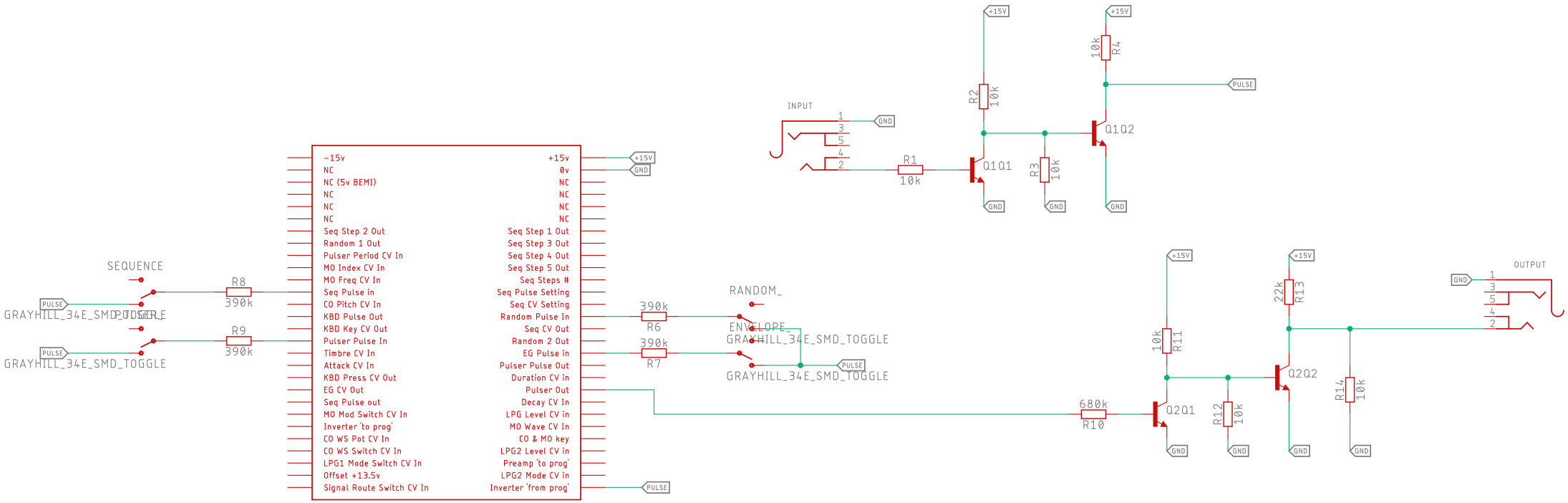
INPUT
1
3
5
4
2
GND
R1
10k
R2
10k
R3
10k
R4
10k
+15V
Q1Q1
Q1Q2
PULSE
SEQUENCE
R8
390k
R9
390k
GRAYHILL_34E_SMD_TOGGLE
PULSE
-15v
NC
NC (5v BEMI)
NC
NC
NC
Seq Step 2 Out
Random 1 Out
Pulser Period CV In
MO Index CV In
MO Freq CV In
Seq Pulse in
CO Pitch CV In
KBD Pulse Out
KBD Key CV Out
Pulser Pulse In
Timbre CV In
Attack CV In
KBD Press CV Out
EG CV Out
Seq Pulse out
MO Mod Switch CV In
Inverter 'to prog'
CO WS Pot CV In
CO WS Switch CV In
LPG1 Mode Switch CV In
Offset +13.5v
Signal Route Switch CV In
+15v
0v
NC
NC
NC
NC
Seq Step 1 Out
Seq Step 3 Out
Seq Step 4 Out
Seq Step 5 Out
Seq Steps #
Seq Pulse Setting
Seq CV Setting
Random Pulse In
Seq CV Out
Random 2 Out
EG Pulse in
Pulser Pulse Out
Duration CV in
Pulser Out
Decay CV In
LPG Level CV in
MO Wave CV In
CO & MO key
LPG2 Level CV in
Preamp 'to prog'
LPG2 Mode CV in
Inverter 'from prog'
390k
R6
390k
R7
RANDOM_
ENVELOPE_
GRAYHILL_34E_SMD_TOGGLE
680k
R10
Q2Q1
R11
10k
R12
10k
Q2Q2
R13
22k
R14
10k
OUTPUT